THE THOMPSON SUBMACHINEGUN
MODEL M1A1
MACHINIST'S WORKING DRAWINGS
IN FOUR PLATES

PLATE ONE

-TRIGGER HOUSING-

CENTER HOLE IS .250 D AND GOES ALL THE WAY THROUGH. LARGEST IS .380 D, SMALLEST IS .150 D; BOTH GO TO A DEPTH OF .875. SMALLEST INTERSECTS AS SHOWN AND LEAVES A SLOT BETWEEN ≈ .075 WIDE. THE SMALLEST SHOULD BE LOCATED .810 FROM THE FACE.

CENTER HOLE IS .185 D AND IS DRILLED FIRST, ALL THE WAY THROUGH. SECOND HOLE IS .300 D, AND IS DRILLED ONLY THROUGH THE FIRST WALL.

SLOT LENGTH IS 6.5" FROM START. USE ≈ .3R CUTTER.

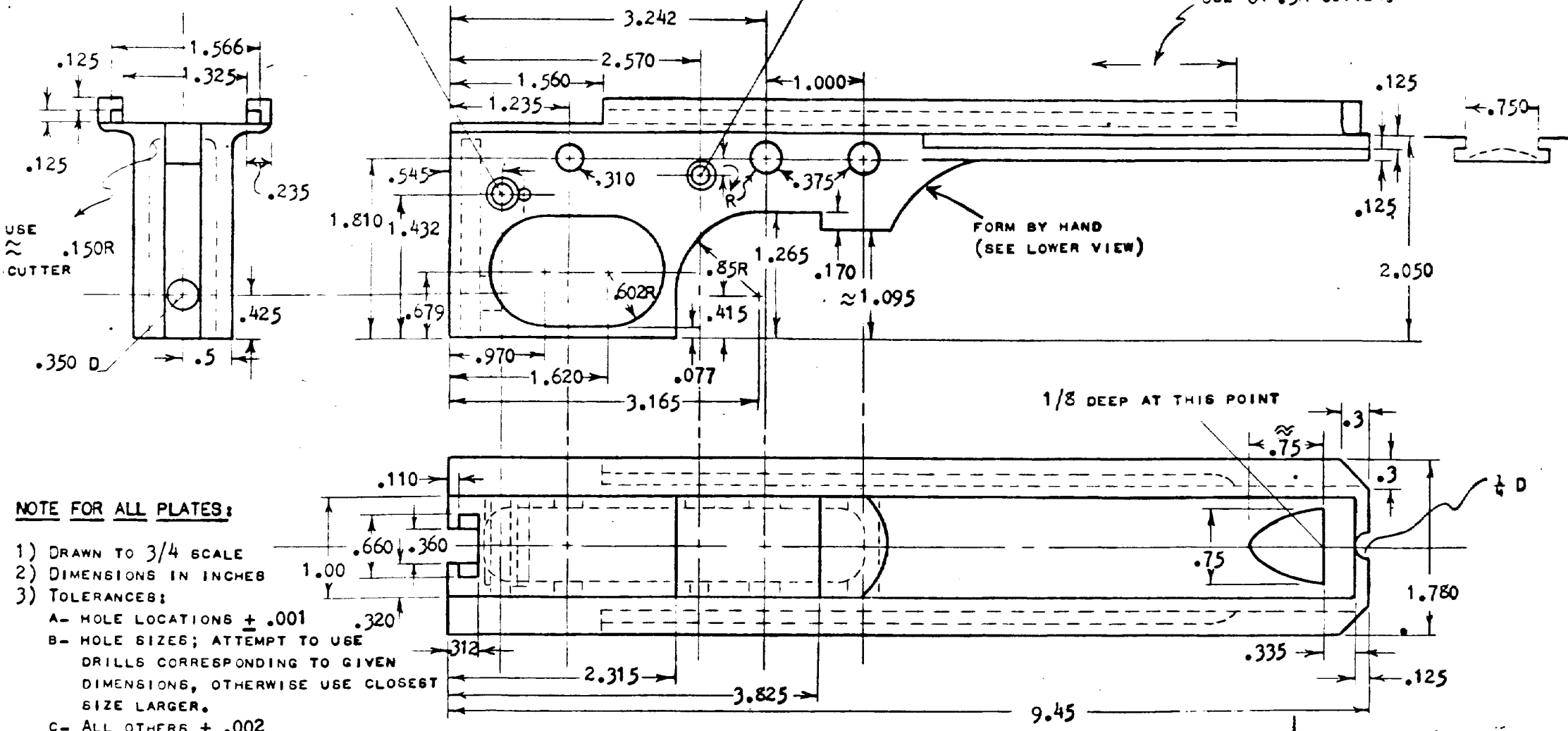

NOTE FOR ALL PLATES:

1) DRAWN TO 3/4 SCALE
2) DIMENSIONS IN INCHES
3) TOLERANCES:
   A- HOLE LOCATIONS ± .001
   B- HOLE SIZES; ATTEMPT TO USE DRILLS CORRESPONDING TO GIVEN DIMENSIONS, OTHERWISE USE CLOSEST SIZE LARGER.
   C- ALL OTHERS ± .002
   D- SLOTS AND DOVETAILS MUST BE MILLED TO FIT.
4) FILLETS AND ROUNDS 1/8R UNLESS INDICATED.

THE THOMPSON SUBMACHINEGUN
MODEL M1A1
MACHINIST'S WORKING DRAWINGS
IN FOUR PLATES

PLATE TWO
-TRIGGER HOUSING-
(ALTERED TO TAKE
M1928 BUTT-STOCK)

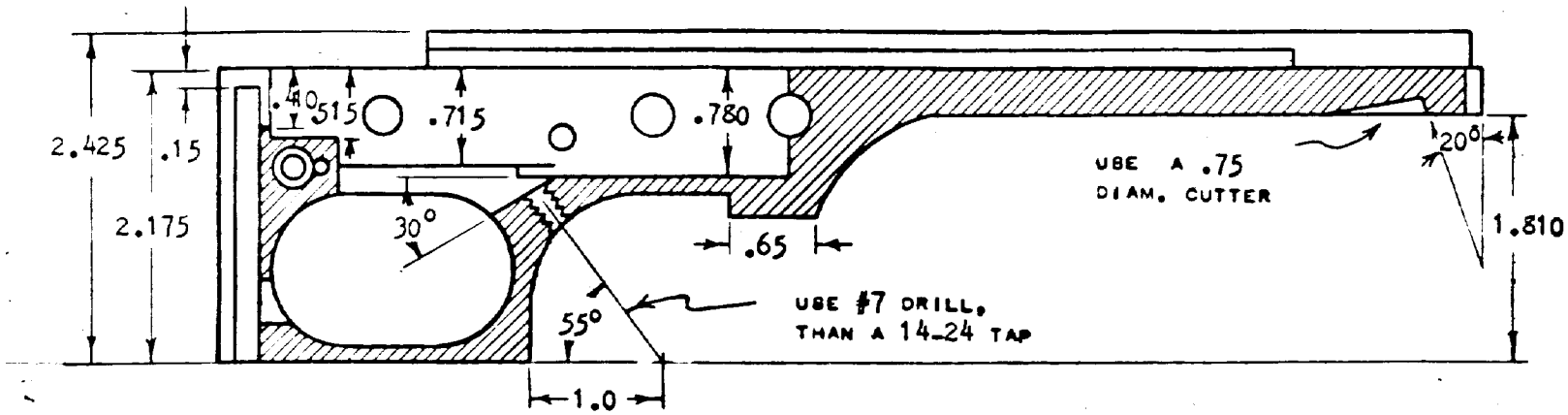

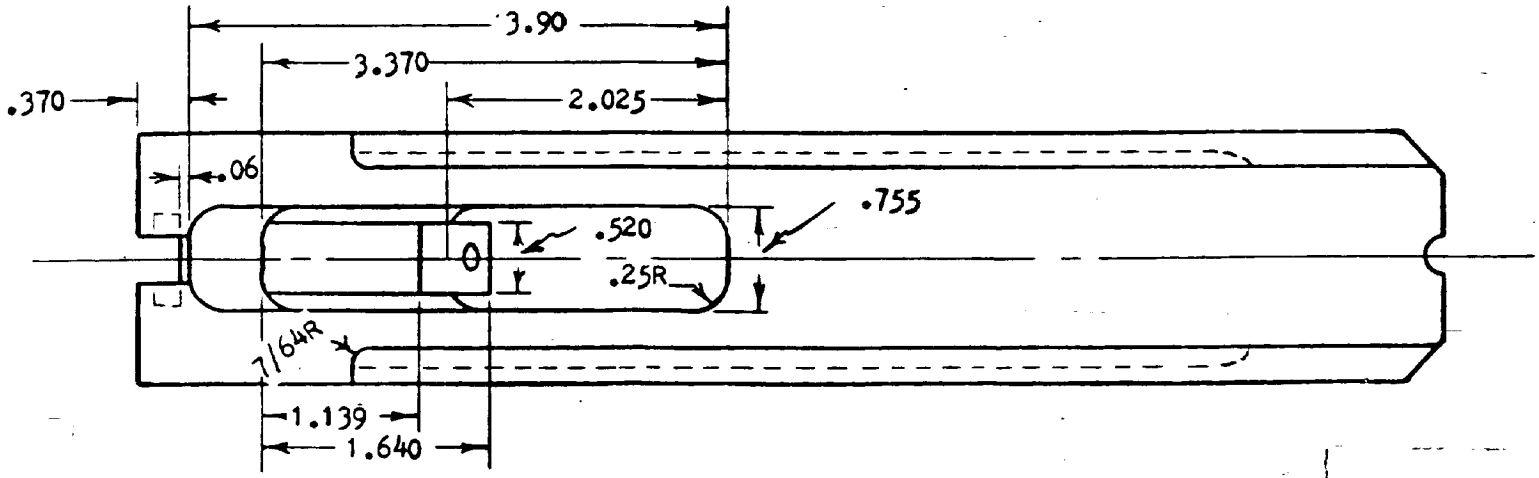

THE THOMPSON SUBMACHINEGUN
MODEL M1A1
MACHINIST'S WORKING DRAWINGS
IN FOUR PLATES

PLATE THREE
- RECEIVER -

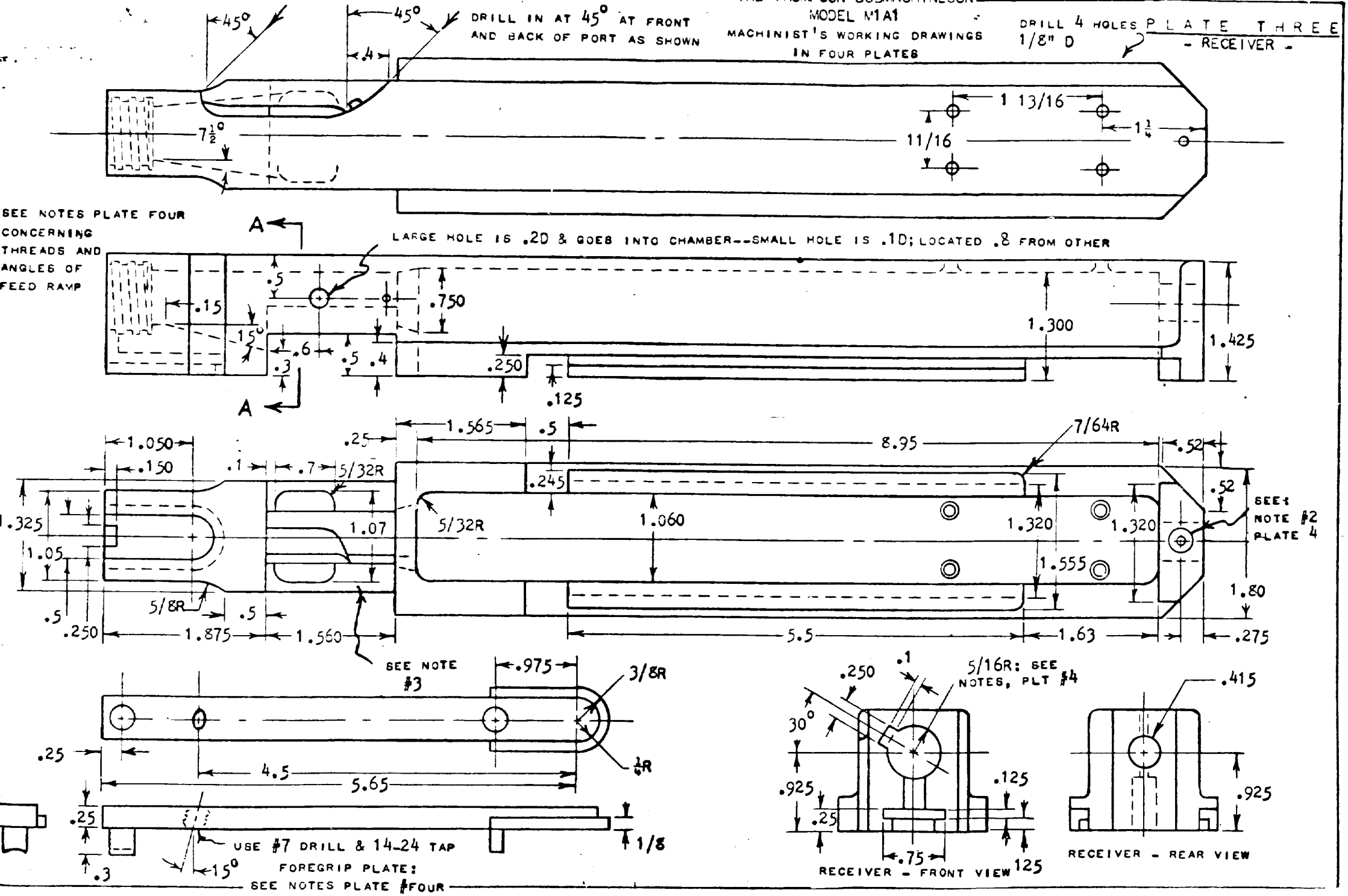

THE THOMPSON SUBMACHINEGUN
MODEL M1A1
MACHINIST'S WORKING DRAWINGS
IN FOUR PLATES

PLATE FOUR

NOTES:

1. ON ALL PLATES: MANY HIDDEN LINES HAVE BEEN ELIMINATED TO SIMPLIFY VIEWS - ONLY NECESSARY HIDDEN LINES ARE SHOWN.

2. DRILL 3/23 LOCATING HOLE FROM TOP, THEN DRILL .300 HOLE FROM BOTTOM TO A DEPTH OF .620 (SEE REAR VIEW).

3. THESE TWO SURFACES ARE CUT AT 45° (SEE SEC. "A-A")

4. TWO .3 DIAM. ROUND BARS ARE HEAT-FITTED INTO PLATE AND THEN CUT AS SHOWN, THE FRONT ONE CUT TO FIT BARREL - THE REAR ONE CUT TO FIT SLOT IN FRONT OF RECEIVER.

5. A 5/8 DIAM. HOLE AND SLOT ARE CUT INTO THE RECEIVER BEFORE THREADS ARE CUT (SEE FRONT VIEW), BOTH GO TO DEPTH OF 3.685.

6. RECEIVER THREADS ARE SQUARE THREADS, 10 TPI, .850 MD AND .750 MIN D, DEPTH TO .55.

7. THE FLOOR OF THE FEED RAMP IS INCLINED 15° AND STARTS .15 INCHES FROM CHAMBER. THE SIDES OF THE RAMP SWING 7.5° TO EITHER SIDE AND START FROM THE EDGE OF THE CHAMBER WHILE STILL AT 15° FROM THE HORIZONTAL. USE A 1/2" DIAMETER CUTTER.

8. BARREL AND RECEIVER MUST BE HEAT-FITTED.

9. USE 4130 CHROME' STEEL FOR RECEIVER

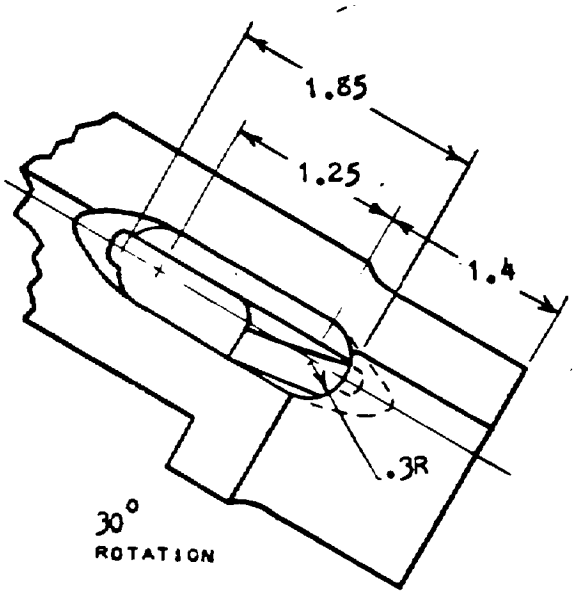

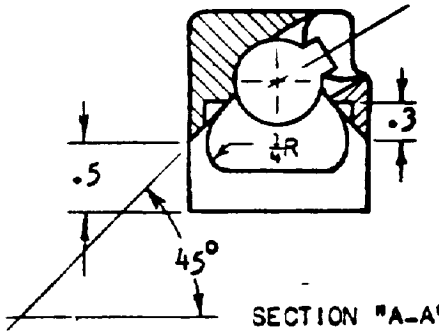

SECTION "A-A"

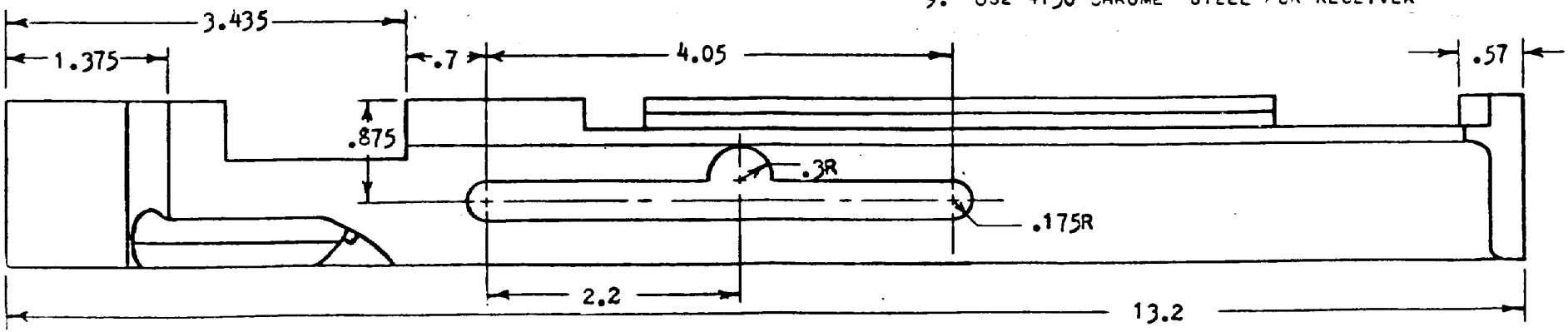

NOTES

1. MATERIAL - FS1340 , FS2330 (FED SPEC QQ-S-624)
2. FINISH - TYPE II CLASS A (SPEC USA S7-0-2)
3. HARDNESS - ROCKWELL A615-70.5
4. HEAT TREATMENT - HEAT 1350° LEAD POWDER CN IN NOTCHES , COOL REHEAT 1350° 1.5 MIN - OIL QUENCH , DRAW 930°

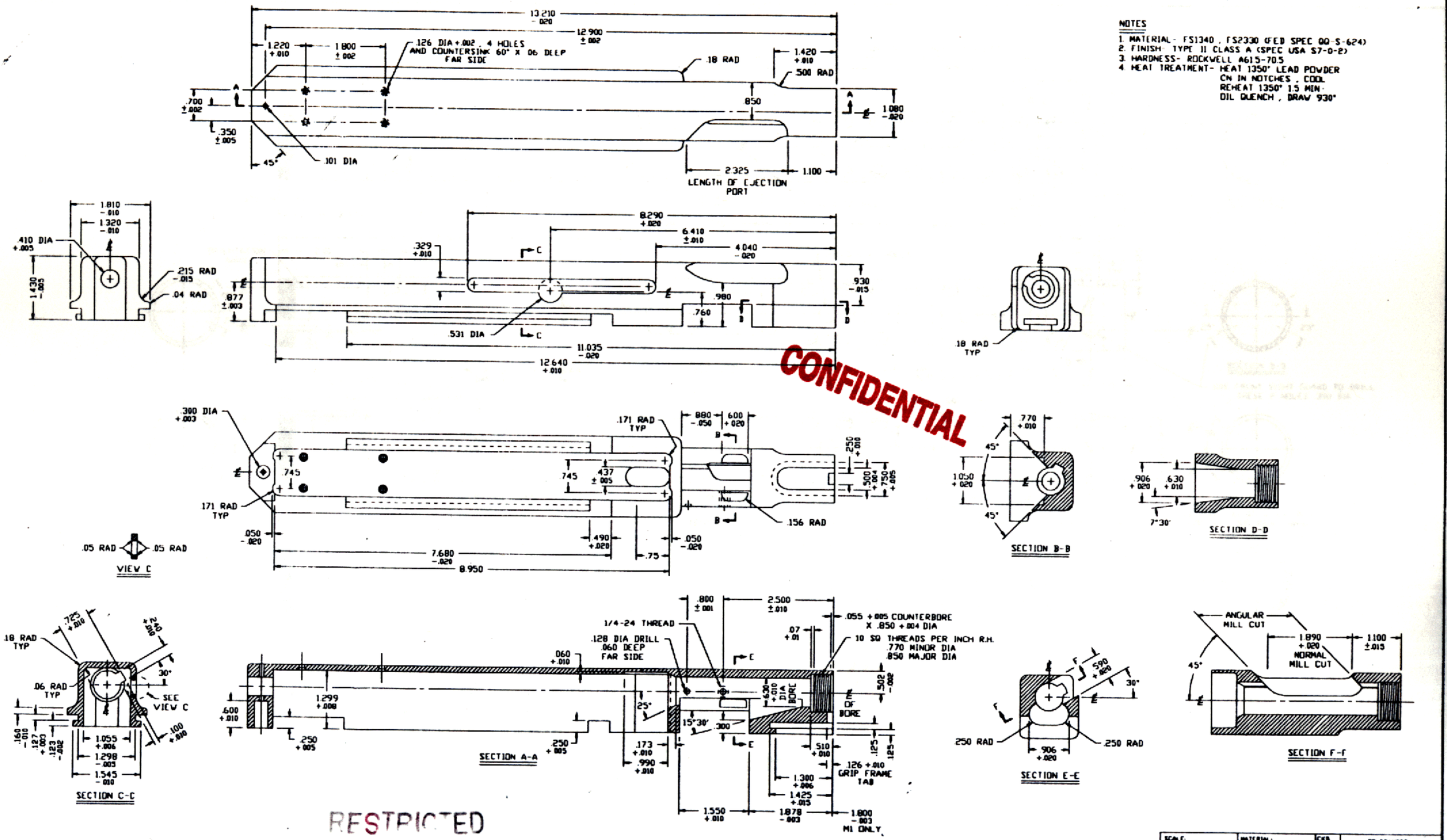

CONFIDENTIAL

RESTRICTED

SCALE: FULL	MATERIAL: SEE NOTE 1	CKD.	TOLERANCES
DWN.	FINISH: SEE NOTE 2	DATE	
TITLE: THOMPSON SUBMACHINE GUN MODEL M1A1		REV.	ANGLES ± .5°
			NO.