SHOTGUN PISTOL

SPECIFICATIONS:

CATEGORY .....HANDMADE - IMPROVISED
CALIBRE .....410 TO. 12 GAUGE
CAPACITY .....SINGLE SHOT - DOUBLE BARREL
.....VARIANTS POSSIBLE

TYPE OF OPERATION .....MANUAL

REMARKS: VARIOUS STYLES AND BARREL LENGTHS ARE ADAPTABLE.

TO LOAD:

To load the pistol, rotate the latch lever 180 degrees counterclockwise. The latch lever pin secures the barrel connecting lug to the receiver frame. Once the latch lever is rotated, the barrel can be hinged open for loading.

After inserting the cartridge, push the barrel back to its seat on the receiver. Then rotate the latch lever clockwise to lock the barrel connecting lug to the receiver body. The barrel chamber must be centerbored. for a cartridge rim seat.

TO FIRE:

Once the barrel has been fully seated and locked in place, pull the cocking handle on top of the bolt tube to the rear until it engages the sear. Pressing the trigger will release the bolt (which contains the firing pin) from sear engagement, discharging the pistol.

SAFETY MECHANISM:

A safety lever is incorporated in this model to prevent accidental release of the bolt mechanism. When the bolt is in the full cocked position, engaged with the sear, the safety lever pin blocks and prevents any movement of the sear. The bolt also can be lowered by simply easing the cocking handle slowly to its rest position. Note: bolt cannot be cocked if safety is applied.

CAUTION: IT IS NOT SAFE TO CARRY THIS PISTOL LOADED. THE FIRING PIN IS PRESSING AGAINST THE CARTRIDGE PRIMER WHEN THE BOLT IS IN ITS REST POSITION. LOAD ONLY WHEN READY TO FIRE. OTHERWISE DRA W THE BOLT OPEN AND A PPL Y THE SAFETY.

EXTRACTOR:

An improvised extractor is housed inside the grip base securing the breech block inside the bolt tubing. It is retained in place by a spring loaded plunger. Pull the extractor by its head under the grip base when needed.

CONSTRUCTION DETAIL:

Like most of the modern improvised methods, the receiver frame is a simple formed steel sheet about 1/16 inch thick. A pivot lug and connecting lug are brazed or welded under the barrel for loading and unloading purposes.

The barrel is thick seamless tubing (diameter depends on the calibre or gauge). A commercial type barrel is safer to use. The bolt tube is the same diameter as the barrel. It is retained to the receiver frame by the grip base connecting the breech block to the tube, and by its rear lug, which is welded or brazed in place.

The grip is one piece. Make it from wood or from plastic stock. It is to be inserted through the grip base. Secure it to the base by a single screw positioned at the back of the stock, mating to a threaded hole in the grip base.

All trigger mechanisms (trigger, sear, etc.) must conform in thickness (equally or less thick) with the barrel pivot lug, onnecting lug, and rear lug of the bolt tube in order to function freely when assembled inside the receiver frame; preferably 1/4 to 3 - 18 inch thick.

PARTS LIST

1. *Front sight - brazed or silver soldered in place (top of barrel)*
2. *Barrel - thick seamless tubing or cut down commercial barrel (charnber is counterbored)*
3. *Steel washer*
4. *Hex screw - securing barrel Connecting lug to trigger housing*
5. *Barrel lug latch lever*
6. *L a tch lever pin*
7. *Latch lever ball spring*
8. *Ball (steel)*
9. *Latch lever retaining pin - if possible roll pin*
10. *Hex screw - retainingfiring pin spring guide post and its base to trigger housing*

IL Steel washer

12. *Hex nut*
13. *Steel washer*
14. *Hex nut*
15. *Steel washer*
16. *Breech block*
17. *Firing pin*
18. *Breech block retaining post pin*
19. *Cocking knob*
20. *Firing pin spring*
21. *Bolt*
22. *Receiver - same diameter as barrel*
23. *Spacer (2 pr.) for sear pin*
24. *Receiver back cover*
25. *Firing pin spring & guide post retaining pin*
26. *Firing pin spring & guide Post*
27. *Barrel connecting lug - brazed to barrel (1/2 in. thick plate)*
28. *Same as #4*
29. *Front screw retaining trigger guard*
30. *Trigger guard*

30A. Same as #6

3 1. Spacer (2 pr.) for trigger

32. *Trigger*
33. *Trigger bar*
34. *Trigger bar support pin ront)*
35. *Rear screw securing trigger guard*
36. *Extractor catch (plunger) spring plug-screw (headless type)*
37. *Plunger spring*
38. *Extractor catch (plunger type)*
39. *Main base for trigger housing & receiver (1/2 in. dia. post)*
40.
41. *Grip (one piece wood)*
42. *Extractor extension (handle)*
43. *Extractor head*
44. *Extractor retaining pin*
45. *Trigger housing* - formed *steel sheet*
46. *Sear*
47. *Sear pin*
48. *Sear spring*
49. *Same as #10*
50. *Firing pin & spring guide base support (1/2 in. thick plate)*
51. *Receiver back cover retaining screw*
52. *Trigger bar support pin (rear)*
53. *Grip screw*

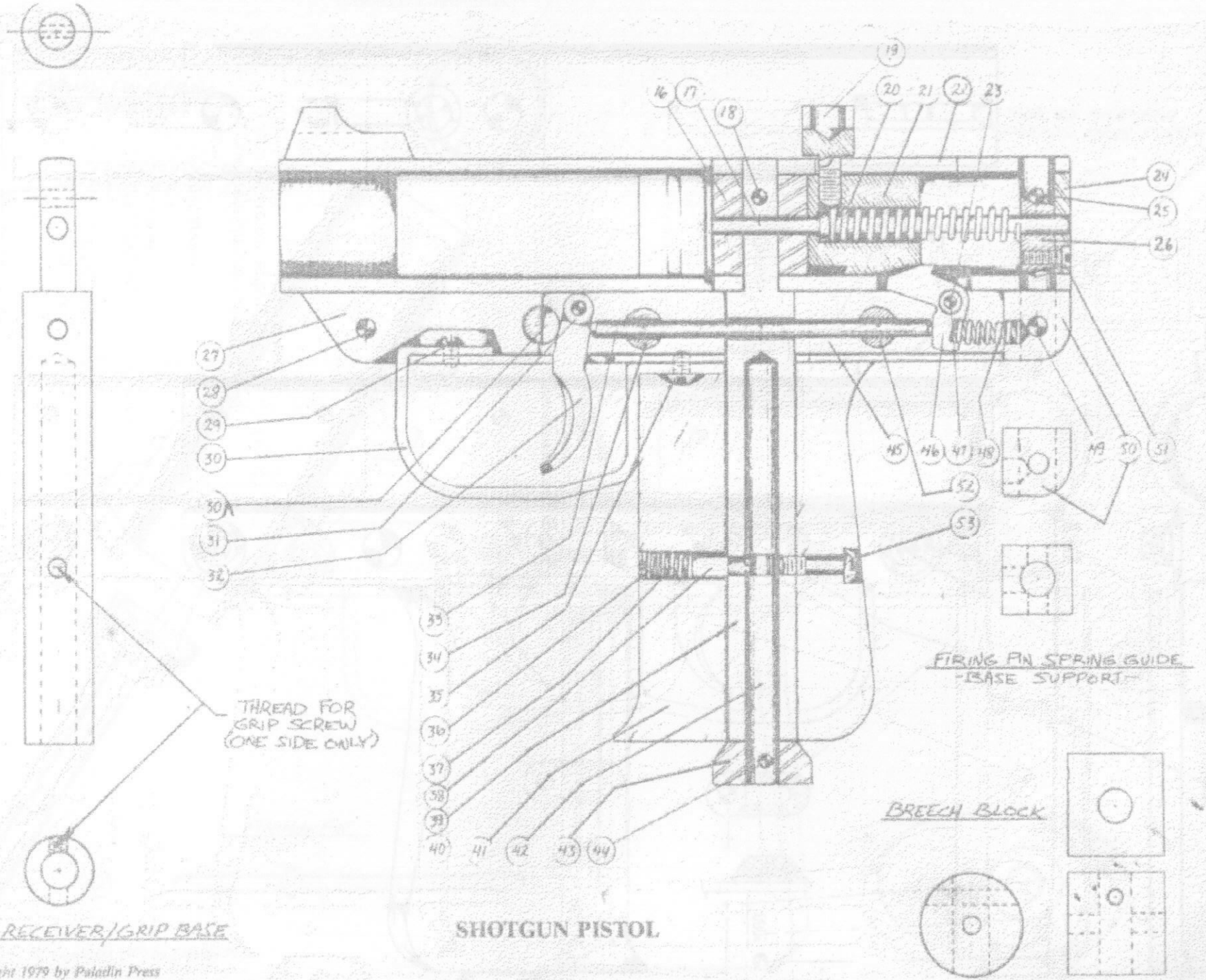

SHOTGUN PISTOL

© Copyright 1979 by Paladin Press

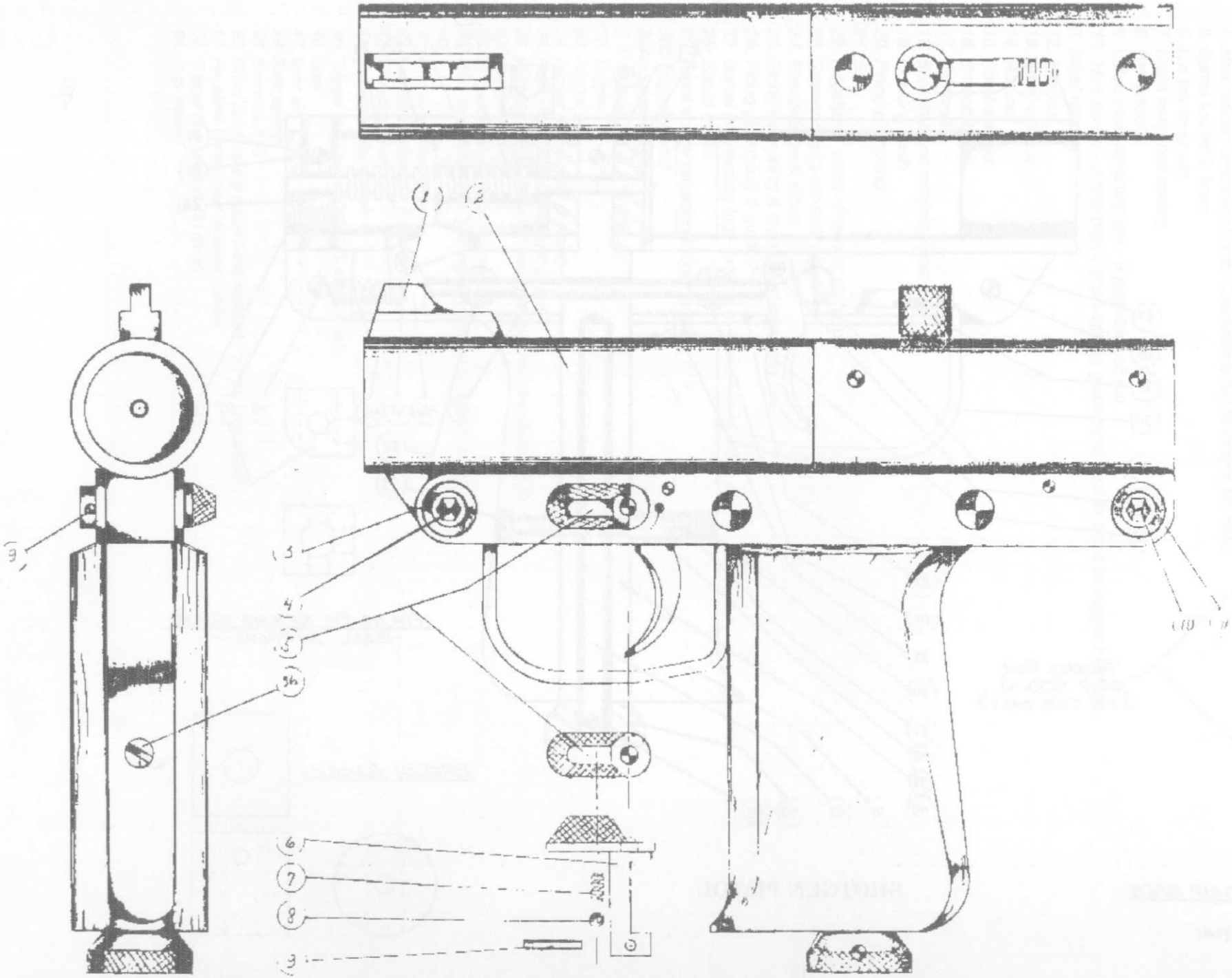
1
2
3
4
5
5a
6
7
8
9
10

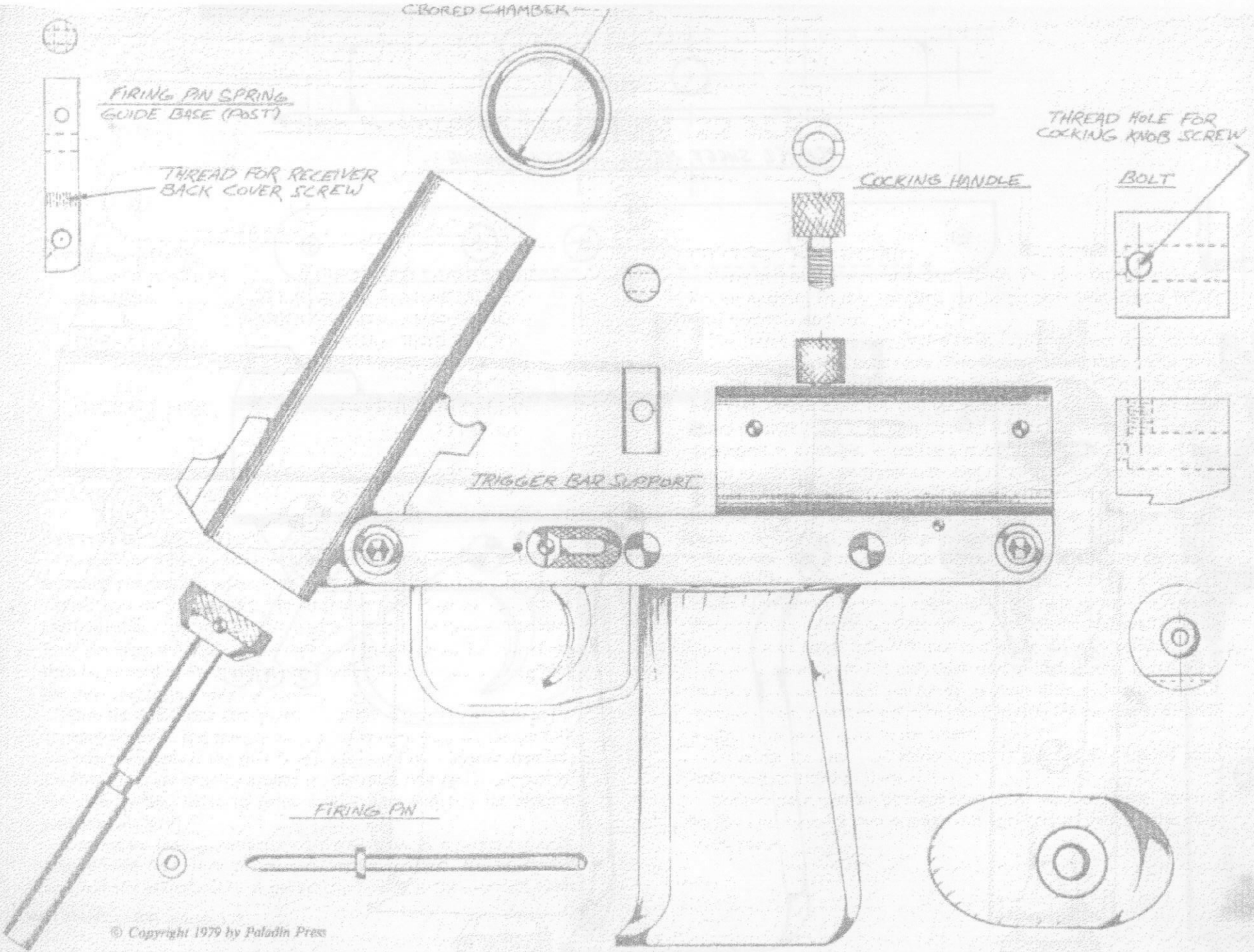

© Copyright 1979 by Paladin Press

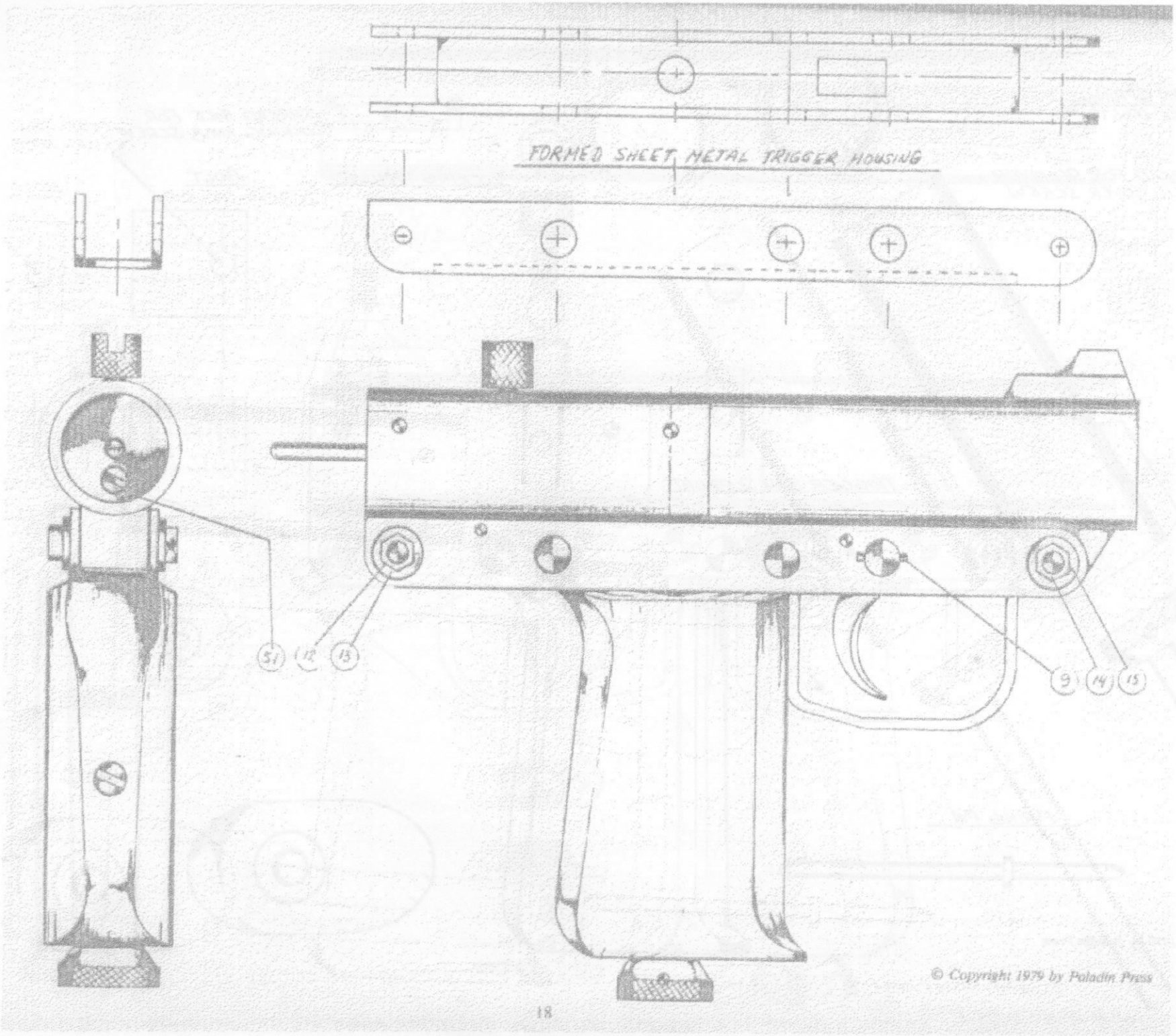

© Copyright 1979 by Paladin Press